OUTLINE AND DIMENSIONS

Indoor Unit : CK10C / 15C / 20C & CR

- (With Wireless Remote Control & With Wired Remote Control)

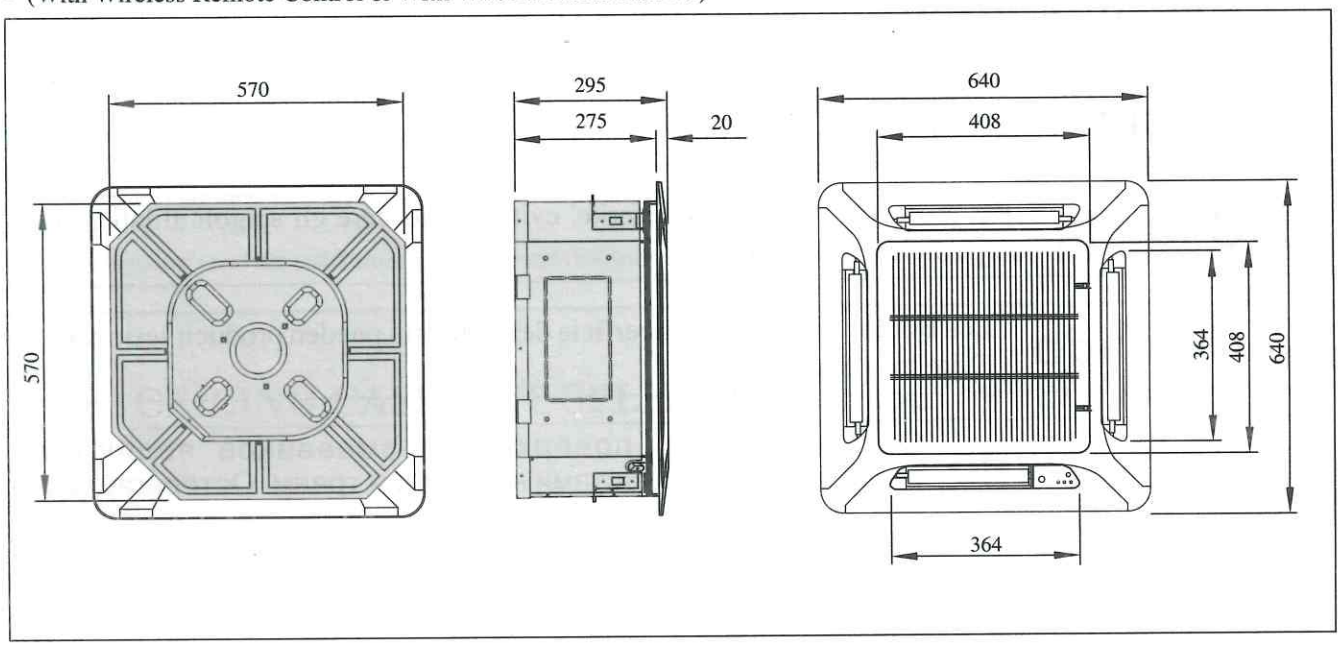

All dimensions are in mm.

Outdoor Unit SL / 4SL

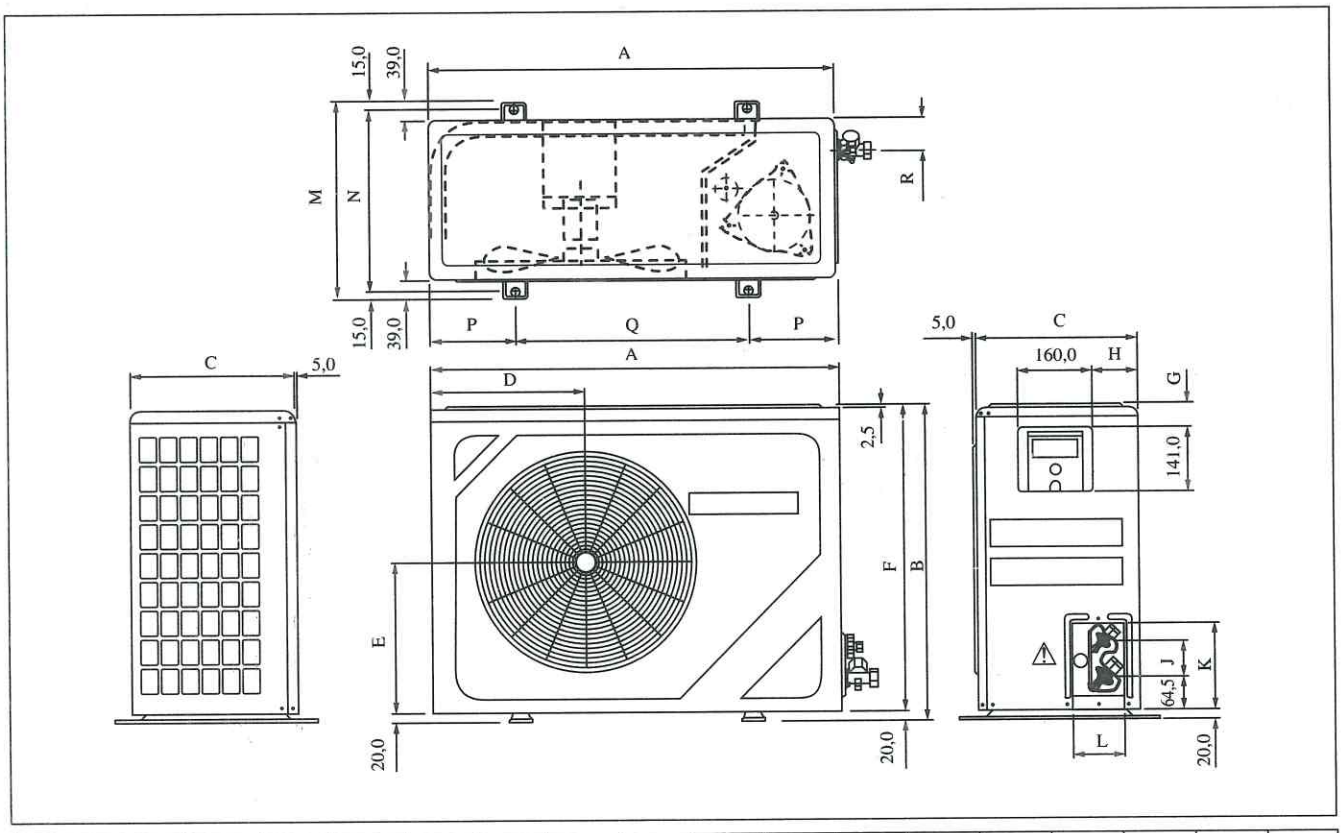

DIMENSION	A	B	C	D	E	F	G	H	J	K	L	M	N	P	Q	R
10B / 10BR 15B / 15BR	740	494	270	266	233	474	52	60	54	166	92	348	318	129	482	68,5
20B / 20BR	840	646	330	297	309	626	46	90	64	177	106	408	378	124	492	78,5

All dimensions are in mm.